EZDOWN
The safest way to lower a tailgate

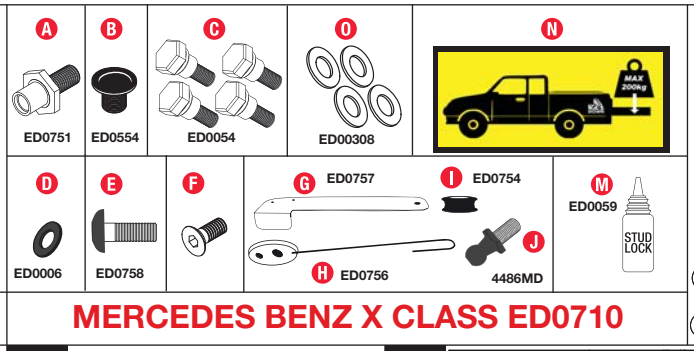

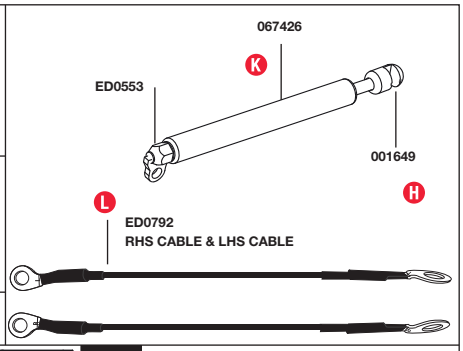

EZDown Instruction

MERCEDES BENZ X CLASS ED0710

1 RHS and LHS are determined when sitting in the Drivers side of the Vehicle.

Recommended to use rust inhibitor where drilled.

Fit RHS Kit first from step 2 -14 with RHS Cable and then repeat on LHS with LHS cable.
Steps 3 + 5 + 13. (B image).

2

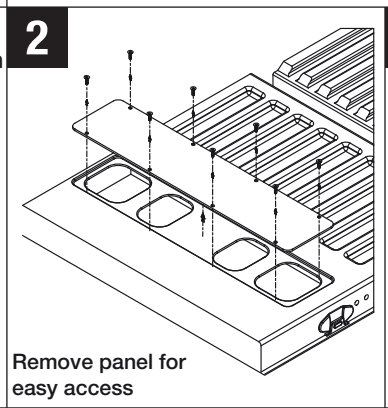

Remove panel for easy access

3

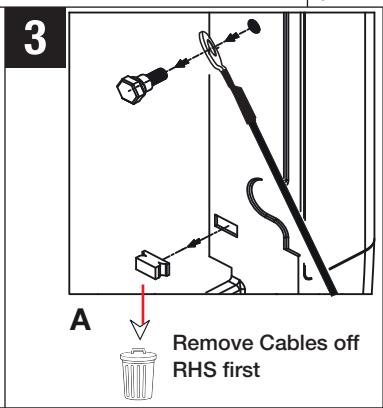

Remove Cables off RHS first

4

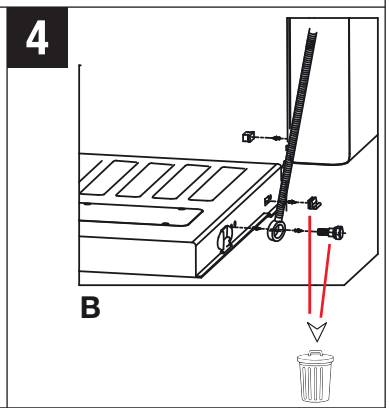

5

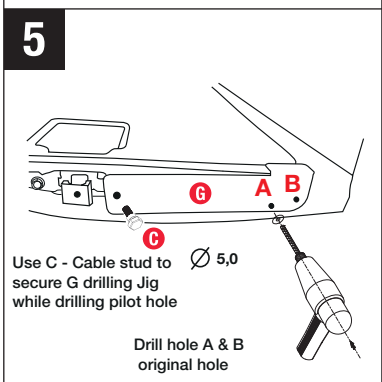

Use C - Cable stud to secure G drilling Jig while drilling pilot hole

Drill hole A & B original hole

6

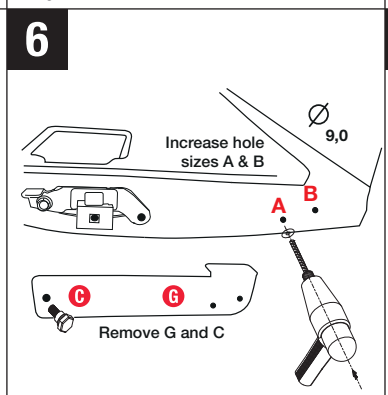

7 Putting it inside the tailgate panel using the metal handle, then breaking the handle off by twisting the metal off

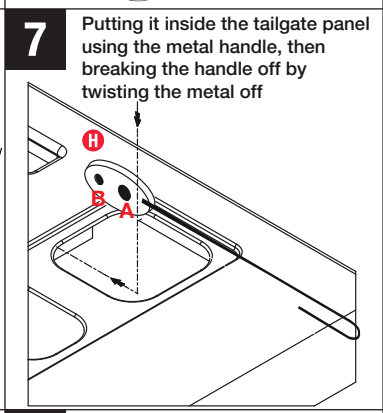

8

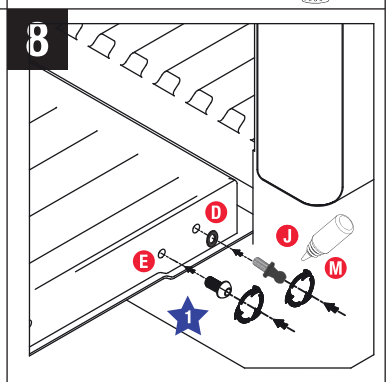

From outside the tailgate panel

9

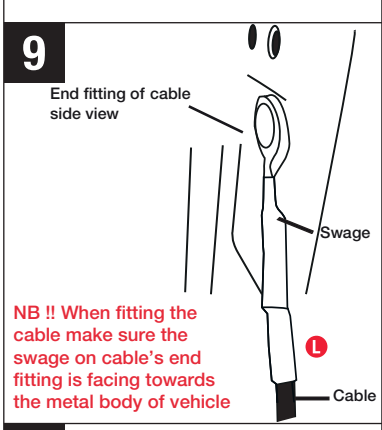

NB !! When fitting the cable make sure the swage on cable's end fitting is facing towards the metal body of vehicle

10

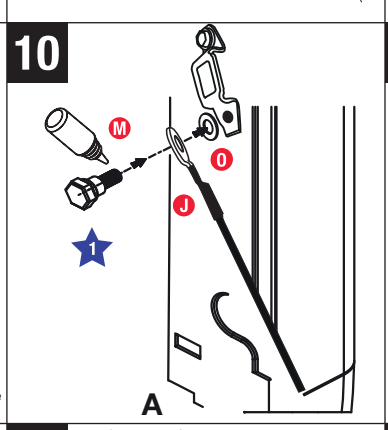

11

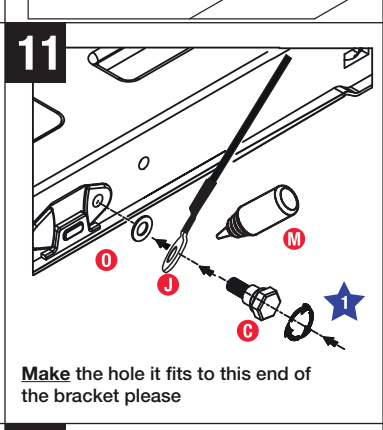

Make the hole it fits to this end of the bracket please

12

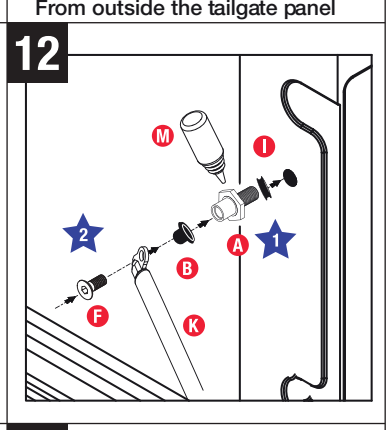

13

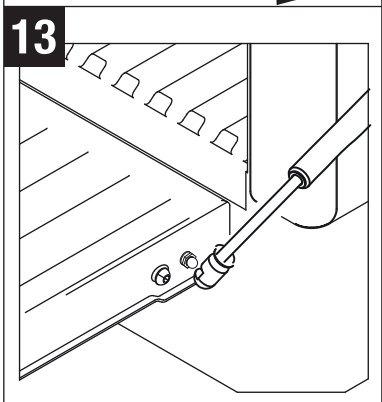

14

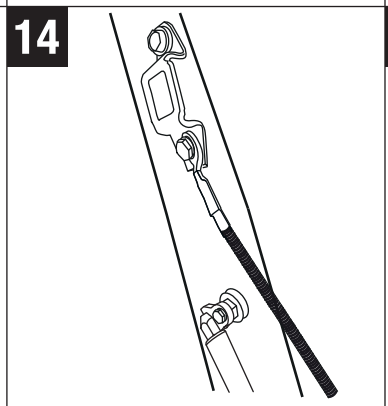

15

Ensure Cables are taking Tailgate Load and NOT the Damper.

16

FITTING CODE	MANUFACTURER	MODEL TYPE	YEAR	STOCKIST	PRODUCT	REVISION	LABOUR	DATE	PAGE
ED0710	MERCEDES	X CLASS	2016 onwards	GENERAL USE	EZDOWN	1	20min	23/01/2018	1
TORQUE – N.m	1 17.5N.m±2.7N.m		2 17.5N.m±2.7N.m			www.ezdown.co.za			

NB: After installation please close tailgate gently to ensure that there is no interference with any hardware.

PROUDLY SOUTH AFRICAN

IMPORTANT: